UNIVERSITY OF CAMBRIDGE INTERNATIONAL EXAMINATIONS
General Certificate of Education Advanced Level

CANDIDATE NAME

CENTRE NUMBER

CANDIDATE NUMBER

5719133184

PHYSICS **9702/43**

Paper 4 A2 Structured Questions **October/November 2011**

2 hours

Candidates answer on the Question Paper.

No Additional Materials are required.

READ THESE INSTRUCTIONS FIRST

Write your Centre number, candidate number and name on all the work you hand in.
Write in dark blue or black pen.
You may use a soft pencil for any diagrams, graphs or rough working.
Do not use staples, paper clips, highlighters, glue or correction fluid.
DO **NOT** WRITE IN ANY BARCODES.

Answer **all** questions.
You may lose marks if you do not show your working or if you do not use appropriate units.

At the end of the examination, fasten all your work securely together.
The number of marks is given in brackets [ ] at the end of each question or part question.

For Examiner's Use	
1	
2	
3	
4	
5	
6	
7	
8	
9	
10	
11	
12	
Total	

This document consists of **21** printed pages and **3** blank pages.

© UCLES 2011

Data

speed of light in free space,	$c = 3.00 \times 10^{8}\ \text{m s}^{-1}$
permeability of free space,	$\mu_0 = 4\pi \times 10^{-7}\ \text{H m}^{-1}$
permittivity of free space,	$\varepsilon_0 = 8.85 \times 10^{-12}\ \text{F m}^{-1}$
elementary charge,	$e = 1.60 \times 10^{-19}\ \text{C}$
the Planck constant,	$h = 6.63 \times 10^{-34}\ \text{J s}$
unified atomic mass constant,	$u = 1.66 \times 10^{-27}\ \text{kg}$
rest mass of electron,	$m_e = 9.11 \times 10^{-31}\ \text{kg}$
rest mass of proton,	$m_p = 1.67 \times 10^{-27}\ \text{kg}$
molar gas constant,	$R = 8.31\ \text{J K}^{-1}\ \text{mol}^{-1}$
the Avogadro constant,	$N_A = 6.02 \times 10^{23}\ \text{mol}^{-1}$
the Boltzmann constant,	$k = 1.38 \times 10^{-23}\ \text{J K}^{-1}$
gravitational constant,	$G = 6.67 \times 10^{-11}\ \text{N m}^2\ \text{kg}^{-2}$
acceleration of free fall,	$g = 9.81\ \text{m s}^{-2}$

© UCLES 2011

Formulae

uniformly accelerated motion, $s = ut + \frac{1}{2}at^2$
$v^2 = u^2 + 2as$

work done on/by a gas, $W = p\Delta V$

gravitational potential, $\phi = -\frac{Gm}{r}$

hydrostatic pressure, $p = \rho gh$

pressure of an ideal gas, $p = \frac{1}{3}\frac{Nm}{V}\langle c^2 \rangle$

simple harmonic motion, $a = -\omega^2 x$

velocity of particle in s.h.m., $v = v_0 \cos \omega t$
$v = \pm \omega \sqrt{(x_0^2 - x^2)}$

electric potential, $V = \frac{Q}{4\pi\varepsilon_0 r}$

capacitors in series, $1/C = 1/C_1 + 1/C_2 + \ldots$

capacitors in parallel, $C = C_1 + C_2 + \ldots$

energy of charged capacitor, $W = \frac{1}{2}QV$

resistors in series, $R = R_1 + R_2 + \ldots$

resistors in parallel, $1/R = 1/R_1 + 1/R_2 + \ldots$

alternating current/voltage, $x = x_0 \sin \omega t$

radioactive decay, $x = x_0 \exp(-\lambda t)$

decay constant, $\lambda = \frac{0.693}{t_{\frac{1}{2}}}$

© UCLES 2011

[Turn over

Section A

Answer **all** the questions in the spaces provided.

1 The planet Mars may be considered to be an isolated sphere of diameter 6.79×10^6 m with its mass of 6.42×10^{23} kg concentrated at its centre.
A rock of mass 1.40 kg rests on the surface of Mars.

For this rock,

(a) (i) determine its weight,

weight = ... N [3]

(ii) show that its gravitational potential energy is -1.77×10^7 J.

[2]

(b) Use the information in **(a)(ii)** to determine the speed at which the rock must leave the surface of Mars so that it will escape the gravitational attraction of the planet.

speed = ... $m\,s^{-1}$ [3]

© UCLES 2011

(c) The mean translational kinetic energy $\langle E_K \rangle$ of a molecule of an ideal gas is given by the expression

$$\langle E_K \rangle = \frac{3}{2}kT$$

where T is the thermodynamic temperature of the gas and k is the Boltzmann constant.

(i) Determine the temperature at which the root-mean-square (r.m.s.) speed of hydrogen molecules is equal to the speed calculated in **(b)**.
Hydrogen may be assumed to be an ideal gas.
A molecule of hydrogen has a mass of 2 u.

temperature = ... K [2]

(ii) State and explain one reason why hydrogen molecules may escape from Mars at temperatures below that calculated in **(i)**.

.....

.....

..... [2]

2 **(a)** A resistance thermometer and a thermocouple thermometer are both used at the same time to measure the temperature of a water bath.

Explain why, although both thermometers have been calibrated correctly and are at equilibrium, they may record different temperatures.

.....

.....

..... [2]

(b) State

(i) in what way the absolute scale of temperature differs from other temperature scales,

.....

..... [1]

(ii) what is meant by the absolute zero of temperature.

.....

..... [1]

(c) The temperature of a water bath increases from 50.00 °C to 80.00 °C.
Determine, in kelvin and to an appropriate number of significant figures,

(i) the temperature 50.00 °C,

temperature = ... K [1]

(ii) the change in temperature of the water bath.

temperature change = ... K [1]

© UCLES 2011

3 **(a)** Define *simple harmonic motion*.

.....

.....

..... [2]

(b) A horizontal plate is vibrating vertically, as shown in Fig. 3.1.

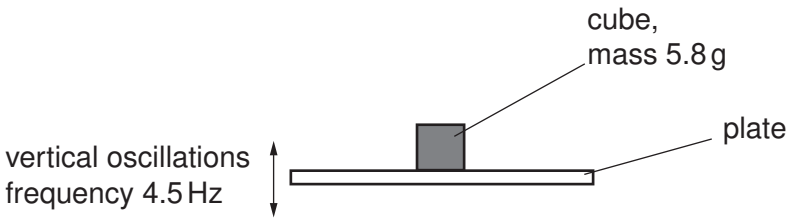

Fig. 3.1

The plate undergoes simple harmonic motion with a frequency of 4.5 Hz and amplitude 3.0 mm.
A metal cube of mass 5.8 g rests on the plate.

Calculate, for the cube, the energy of oscillation.

energy = ... J [3]

(c) The amplitude of oscillation of the plate in **(b)** is gradually increased. The frequency remains constant.
At one particular amplitude, the cube just loses contact momentarily with the plate.

(i) State the position of the plate in its oscillation at the point when the cube loses contact.

.....

.....

..... [2]

© UCLES 2011

(ii) Calculate this amplitude of oscillation.

amplitude = ... m [2]

© UCLES 2011

4 **(a)** State two functions of capacitors in electrical circuits.

1. .....

.....

2. .....

.....

[2]

(b) Three uncharged capacitors of capacitance C_1, C_2 and C_3 are connected in series, as shown in Fig. 4.1.

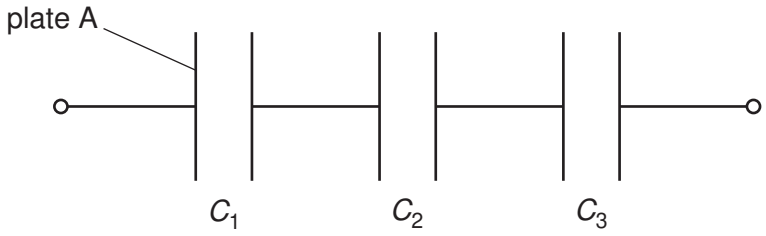

Fig. 4.1

A charge of $+Q$ is put on plate A of the capacitor of capacitance C_1.

(i) State and explain the charges that will be observed on the other plates of the capacitors.
You may draw on Fig. 4.1 if you wish.

.....

.....

..... [2]

(ii) Use your answer in **(i)** to derive an expression for the combined capacitance of the capacitors.

[2]

(c) A capacitor of capacitance 12 μF is charged using a battery of e.m.f. 9.0 V, as shown in Fig. 4.2.

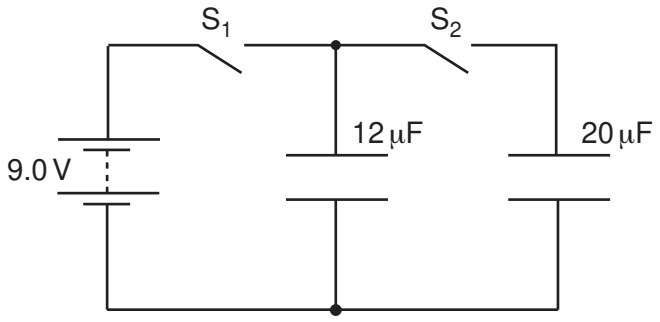

Fig. 4.2

Switch S_1 is closed and switch S_2 is open.

(i) The capacitor is now disconnected from the battery by opening S_1.
Calculate the energy stored in the capacitor.

energy = ... J [2]

(ii) The 12 μF capacitor is now connected to an uncharged capacitor of capacitance 20 μF by closing S_2. Switch S_1 remains open.
The total energy now stored in the two capacitors is 1.82×10^{-4} J.

Suggest why this value is different from your answer in **(i).**

.....

..... [1]

5 The components for a bridge rectifier are shown in Fig. 5.1.

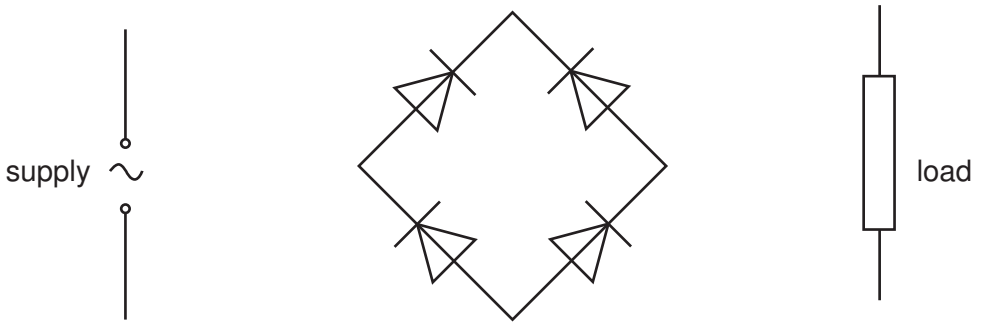

Fig. 5.1

(a) Complete the circuit of Fig. 5.1 by showing the connections of the supply and of the load to the diodes. [2]

(b) Suggest one advantage of the use of a bridge rectifier, rather than a single diode, for the rectification of alternating current.

.....

..... [1]

(c) State

(i) what is meant by *smoothing*,

.....

..... [1]

(ii) the effect of the value of the capacitance of the smoothing capacitor in relation to smoothing.

.....

.....

..... [2]

6 **(a)** Define the *tesla*.

.....

.....

.....

..... [3]

(b) A charged particle of mass m and charge $+q$ is travelling with velocity v in a vacuum. It enters a region of uniform magnetic field of flux density B as shown in Fig. 6.1.

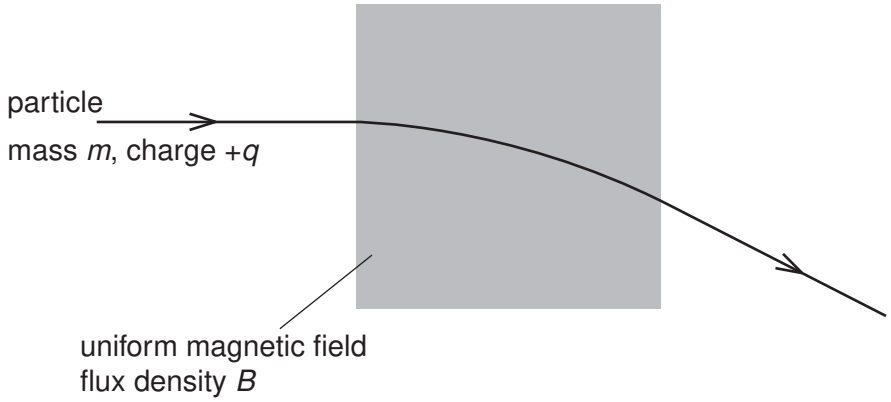

Fig. 6.1

The magnetic field is normal to the direction of motion of the particle. The path of the particle in the field is the arc of a circle of radius r.

(i) Explain why the path of the particle in the field is the arc of a circle.

.....

.....

.....

..... [2]

(ii) Show that the radius r is given by the expression

$$r = \frac{mv}{Bq}.$$

[1]

(c) A uniform magnetic field is produced in the region PQRS, as shown in Fig. 6.2.

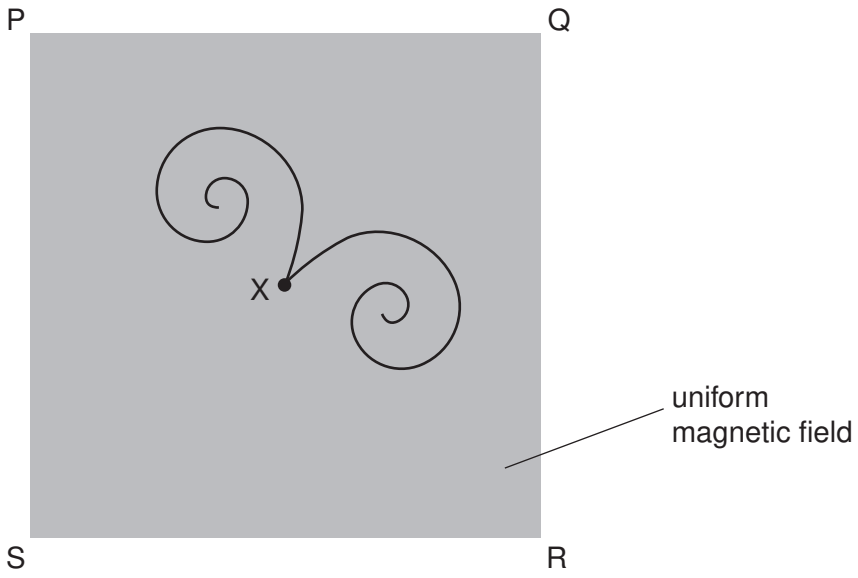

Fig. 6.2

The magnetic field is normal to the page.
At point X, a gamma-ray photon interaction causes two particles to be formed. The paths of these particles are shown in Fig. 6.2.

(i) Suggest, with a reason, why each of the paths is a spiral, rather than the arc of a circle.

.....

.....

..... [2]

(ii) State and explain what can be deduced from the paths about

1. the charges on the two particles,

.....

.....

..... [2]

2. the initial speeds of the two particles.

.....

.....

..... [2]

© UCLES 2011

7 An explanation of the photoelectric effect includes the terms photon energy and work function energy.

(a) Explain what is meant by

(i) a *photon*,

.....

.....

..... [2]

(ii) *work function energy*.

.....

..... [1]

(b) In an experiment to investigate the photoelectric effect, a student measures the wavelength λ of the light incident on a metal surface and the maximum kinetic energy E_{max} of the emitted electrons. The variation with E_{max} of $\frac{1}{\lambda}$ is shown in Fig. 7.1.

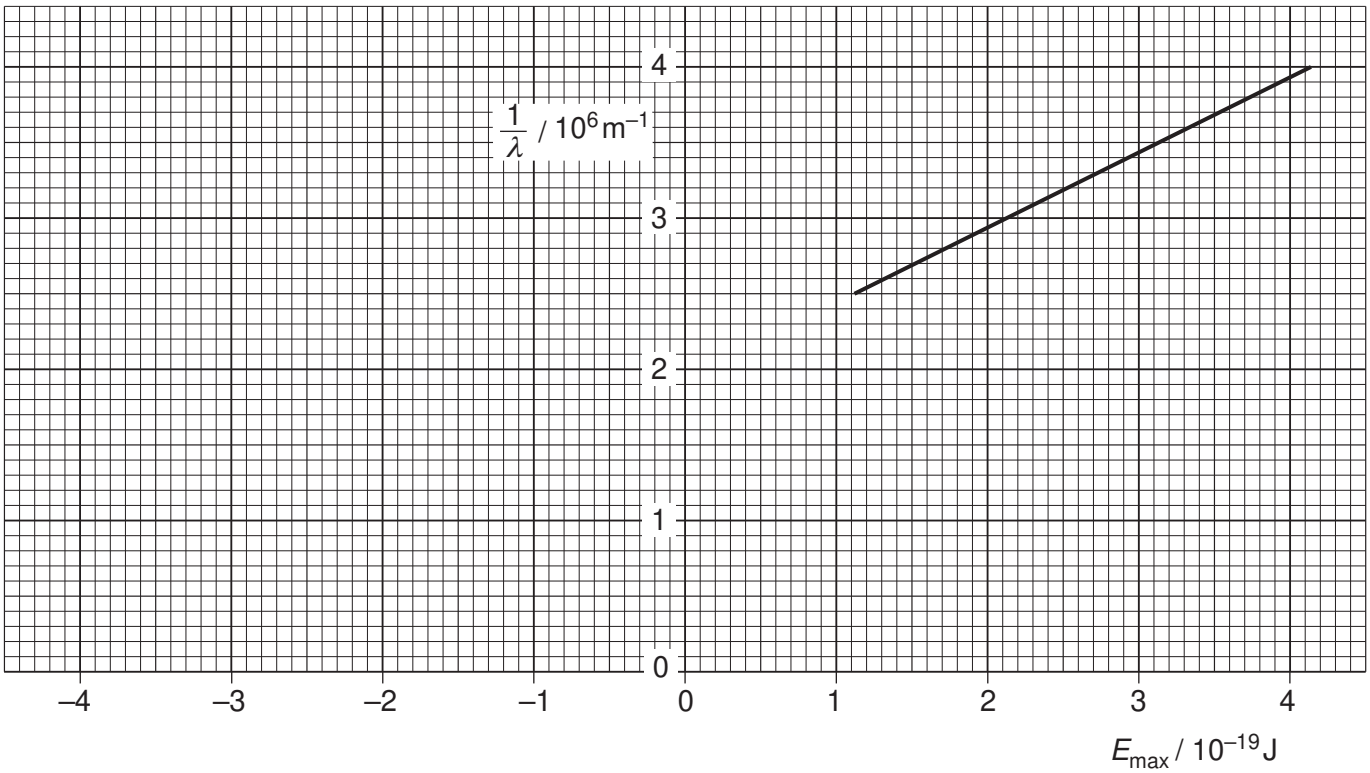

Fig. 7.1

(i) The work function energy of the metal surface is Φ.
State an equation, in terms of λ, Φ and E_{max}, to represent conservation of energy for the photoelectric effect. Explain any other symbols you use.

.....

.....

..... [2]

© UCLES 2011

(ii) Use your answer in **(i)** and Fig. 7.1 to determine

1. the work function energy Φ of the metal surface,

Φ = ... J [2]

2. a value for the Planck constant.

Planck constant = ... J s [3]

8 Radon-222 is a radioactive element having a half-life of 3.82 days.

Radon-222, when found in atmospheric air, can present a health hazard. Safety measures should be taken when the activity of radon-222 exceeds 200 Bq per cubic metre of air.

(a) (i) Define radioactive *decay constant*.

.....

.....

..... [2]

(ii) Show that the decay constant of radon-222 is $2.1 \times 10^{-6}\,s^{-1}$.

[1]

(b) A volume of $1.0\,m^3$ of atmospheric air contains 2.5×10^{25} molecules.

Calculate the ratio

$$\frac{\text{number of air molecules in } 1.0\,m^3 \text{ of atmospheric air}}{\text{number of radon-222 atoms in } 1.0\,m^3 \text{ of atmospheric air}}$$

for the minimum activity of radon-222 at which safety measures should be taken.

ratio = ... [3]

© UCLES 2011

BLANK PAGE

Please turn over for Section B.

Section B

Answer **all** the questions in the spaces provided.

9 **(a)** The resistance of a light-dependent resistor (LDR) is approximately 500 Ω in daylight.
Suggest an approximate value for the resistance of the LDR in darkness.

resistance = ... Ω [1]

(b) An electronic light-meter is used to warn when light intensity becomes low.
A light-dependent resistor is connected into the circuit of Fig. 9.1.

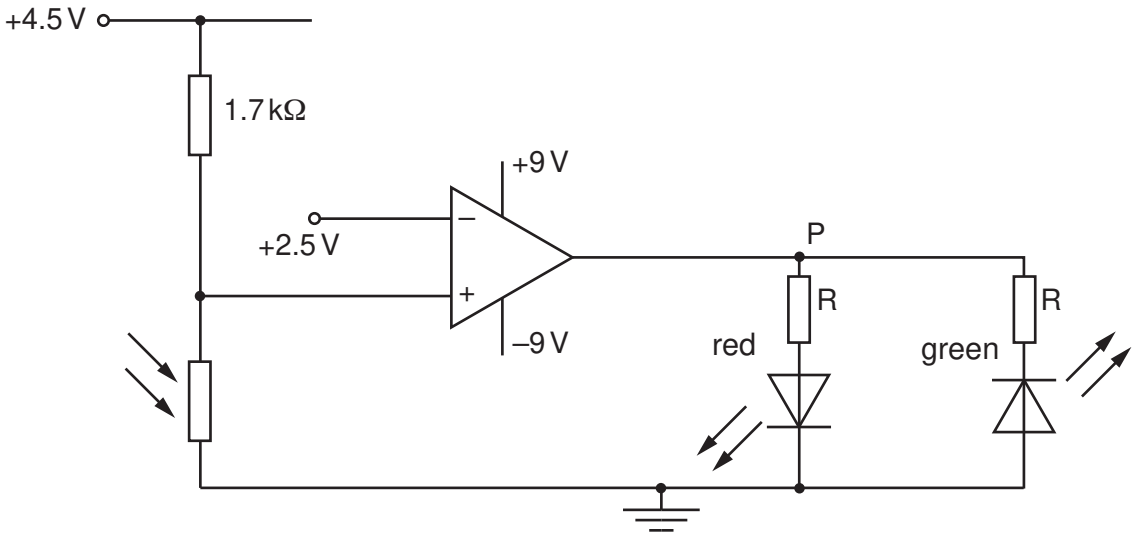

Fig. 9.1

The operational amplifier (op-amp) is ideal.
The resistors R are to ensure that the light-emitting diodes (LEDs) do not over-heat.

(i) On Fig. 9.1, mark the polarity of the point P for the red LED to be emitting light. [1]

(ii) The LDR is in daylight and has a resistance of 500 Ω.
State and explain which diode, red or green, will be emitting light.

.....

.....

.....

..... [3]

(iii) The intensity of the light decreases and the LDR is in darkness.
State and explain the effect on the LEDs of this change in intensity.

.....

.....

..... [2]

© UCLES 2011

10 Explain the principles of the generation and detection of ultrasound waves.

.....

.....

.....

.....

.....

.....

.....

.....

.....

..... [6]

11 **(a)** Distinguish between *sharpness* and *contrast* in X-ray imaging.

sharpness: .....

.....

contrast: .....

.....
[2]

(b) A student investigates the absorption of X-ray radiation in a model arm. A cross-section of the model arm is shown in Fig. 11.1.

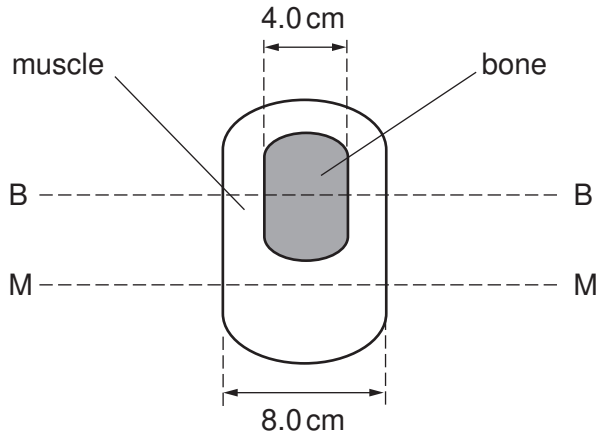

Fig. 11.1

Parallel X-ray beams are directed along the line MM and along the line BB.
The linear absorption coefficients of the muscle and of the bone are $0.20\,cm^{-1}$ and $12\,cm^{-1}$ respectively.

Calculate the ratio

$$\frac{\text{intensity of emergent X-ray beam from model}}{\text{intensity of incident X-ray beam on model}}$$

for a parallel X-ray beam directed along the line

(i) MM,

ratio = ... [2]

(ii) BB.

ratio = ... [3]

(c) State whether your answers in **(b)** would indicate that the X-ray image

(i) is sharp,

..... [1]

(ii) has good contrast.

..... [1]

12 In a cellular phone network, a region is divided into a number of cells, each with its own base station.

(a) Suggest and explain two reasons why a region is divided into a number of cells.

1. .....

.....

.....

2. .....

.....

.....

[4]

(b) A passenger in a car is using a mobile phone as the car moves across several cells. Outline how it is ensured that the phone call is continuous.

.....

.....

.....

.....

..... [4]

BLANK PAGE

BLANK PAGE

Permission to reproduce items where third-party owned material protected by copyright is included has been sought and cleared where possible. Every reasonable effort has been made by the publisher (UCLES) to trace copyright holders, but if any items requiring clearance have unwittingly been included, the publisher will be pleased to make amends at the earliest possible opportunity.

University of Cambridge International Examinations is part of the Cambridge Assessment Group. Cambridge Assessment is the brand name of University of Cambridge Local Examinations Syndicate (UCLES), which is itself a department of the University of Cambridge.

© UCLES 2011